ESP32S3-R8

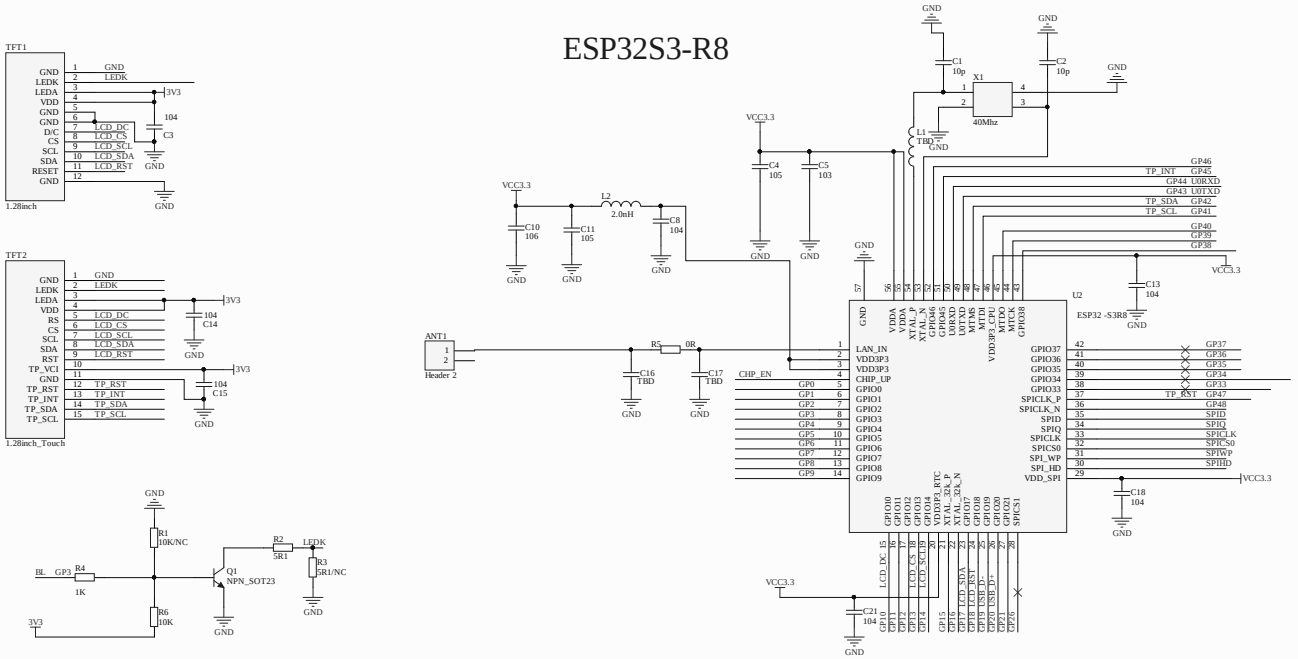

POWER

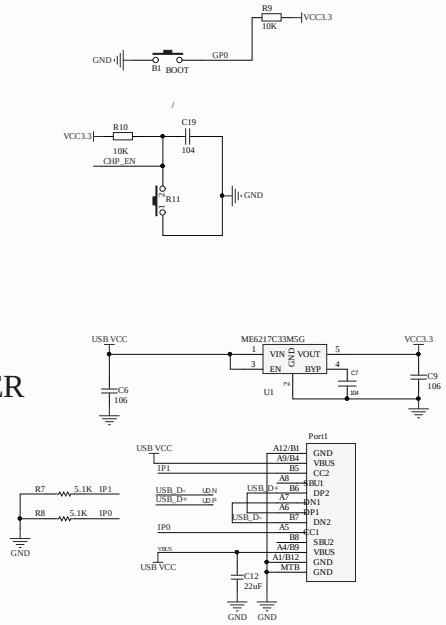

FLASH

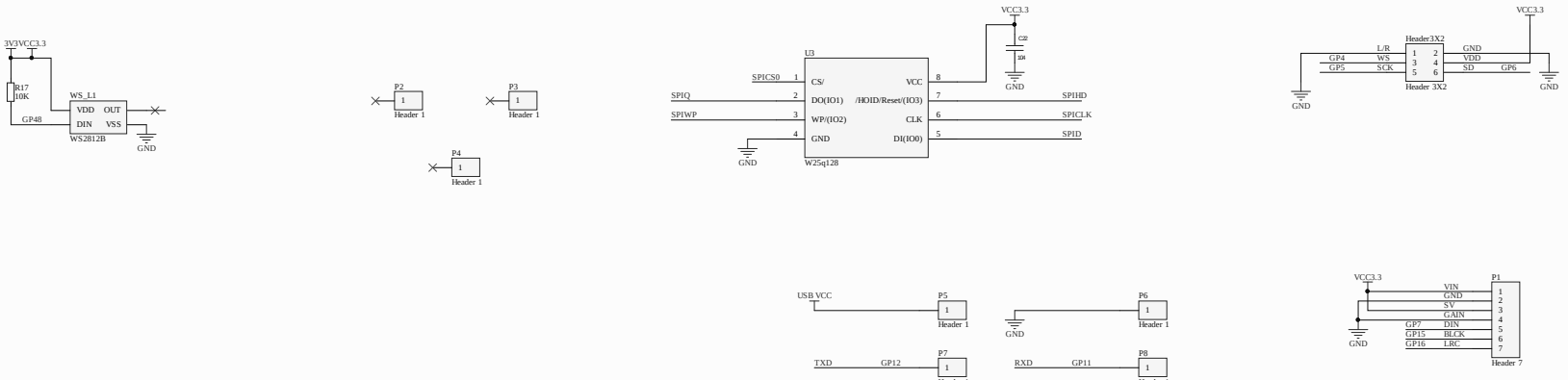

Title		
Size A2	Number	Revision
Date: 2025/3/21		Sheet of
File: \\...\ESP32S3-1.28inch-AI.SchDoc		Drawn By: