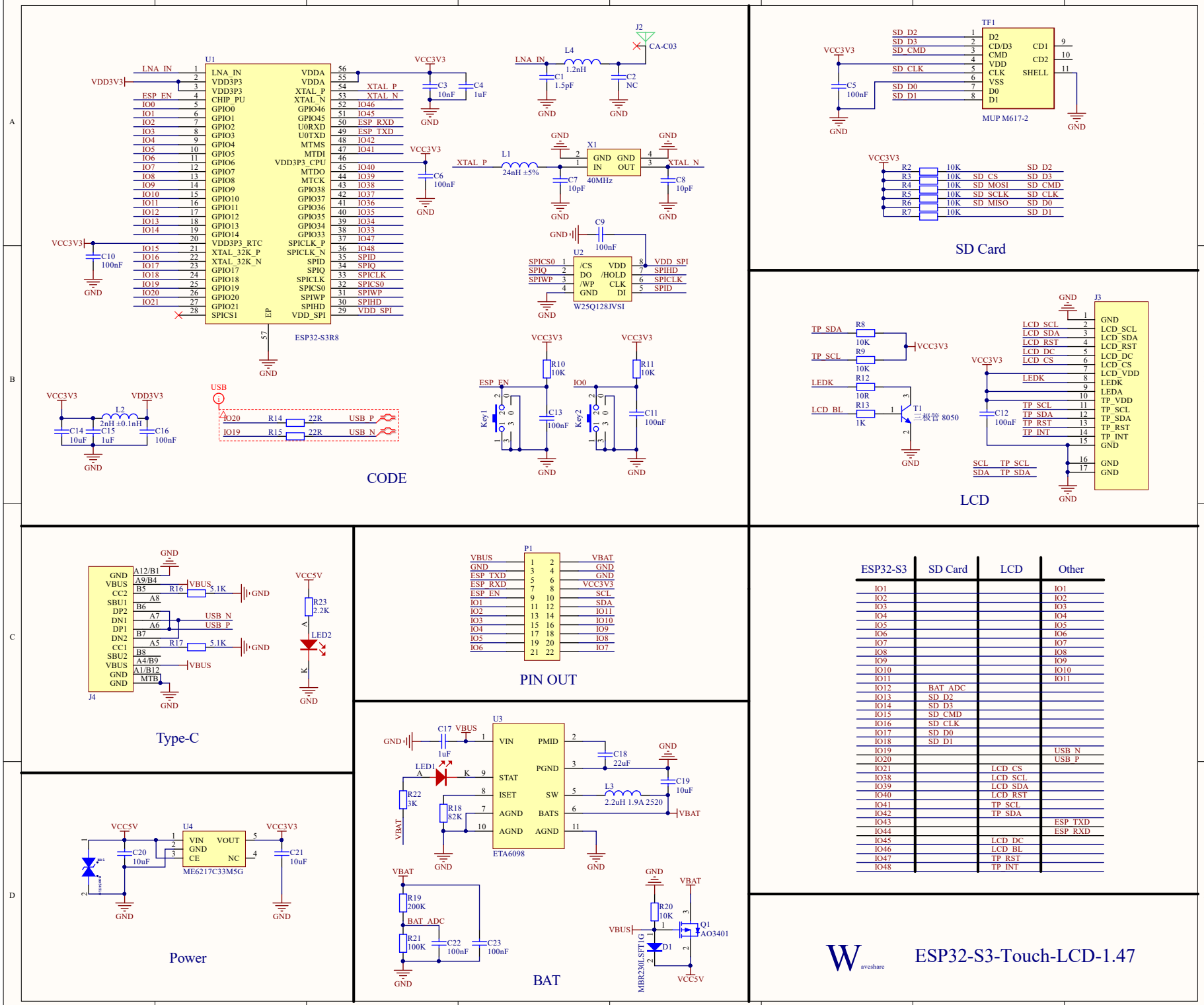
CODE
U1
ESP32-S3R8
LNA_IN
VDD3V3
ESP_EN
IO0
IO1
IO2
IO3
IO4
IO5
IO6
IO7
IO8
IO9
IO10
IO11
IO12
IO13
IO14
IO15
IO16
IO17
IO18
IO19
IO20
IO21
VDDA
XTAL_P
XTAL_N
IO46
IO45
ESP_RXD
ESP_TXD
IO42
IO41
IO40
IO39
IO38
IO37
IO36
IO35
IO34
IO33
IO47
IO48
SPID
SPIQ
SPICLK
SPICS0
SPIWP
SPIHD
VDD_SPI
VCC3V3
GND
C3 10nF
C4 1uF
C6 100nF
C10 100nF
L4 1.2nH
C1 1.5pF
C2 NC
J2 CA-C03
L1 24nH ±5%
X1 40MHz
C7 10pF
C8 10pF
C9 100nF
U2 W25Q128JVSI
/CS
DO
/WP
GND
VDD
/HOLD
CLK
DI
SPICS0
SPIQ
SPIWP
VDD_SPI
SPIHD
SPICLK
SPID
USB
IO20
IO19
R14 22R
R15 22R
USB_P
USB_N
L2 2nH ±0.1nH
C14 10uF
C15 1uF
C16 100nF
R10 10K
R11 10K
Key1
Key2
C13 100nF
C11 100nF
SD Card
TF1
MUP M617-2
SD_D2
SD_D3
SD_CMD
SD_CLK
SD_D0
SD_D1
D2
CD/D3
CMD
VDD
CLK
VSS
D0
D1
CD1
CD2
SHELL
C5 100nF
R2 10K SD_D2
R3 10K SD_CS SD_D3
R4 10K SD_MOSI SD_CMD
R5 10K SD_SCLK SD_CLK
R6 10K SD_MISO SD_D0
R7 10K SD_D1
LCD
J3
TP_SDA
TP_SCL
LEDK
LCD_BL
R8 10K
R9 10K
R12 10R
R13 1K
T1 三极管 8050
C12 100nF
LCD_SCL
LCD_SDA
LCD_RST
LCD_DC
LCD_CS
LCD_VDD
LEDA
TP_VDD
TP_SCL
TP_SDA
TP_RST
TP_INT
SCL TP_SCL
SDA TP_SDA
Type-C
J4
GND
VBUS
CC2
SBU1
DP2
DN1
DP1
DN2
CC1
SBU2
A12/B1
A9/B4
B5
A8
B6
A7
A6
B7
A5
B8
A4/B9
A1/B12
MTB
R16 5.1K
R17 5.1K
USB_N
USB_P
VCC5V
R23 2.2K
LED2
PIN OUT
P1
VBAT
SCL
SDA
IO11
IO10
IO9
IO8
IO7
Power
U4
ME6217C33M5G
VIN
VOUT
GND
CE
NC
C20 10uF
C21 10uF
U3
ETA6098
C17 1uF
LED1
R22 3K
R18 82K
VIN
PMID
PGND
STAT
ISET
SW
AGND
BATS
C18 22uF
C19 10uF
L3 2.2uH 1.9A 2520
BAT
R19 200K
R21 100K
BAT_ADC
C22 100nF
C23 100nF
R20 10K
Q1 AO3401
D1 MBR230LSFT1G
ESP32-S3
SD Card
LCD
Other
IO12 BAT_ADC
IO13 SD_D2
IO14 SD_D3
IO15 SD_CMD
IO16 SD_CLK
IO17 SD_D0
IO18 SD_D1
IO19 USB_N
IO20 USB_P
IO21 LCD_CS
IO38 LCD_SCL
IO39 LCD_SDA
IO40 LCD_RST
IO41 TP_SCL
IO42 TP_SDA
IO43 ESP_TXD
IO44 ESP_RXD
IO45 LCD_DC
IO46 LCD_BL
IO47 TP_RST
IO48 TP_INT
ESP32-S3-Touch-LCD-1.47