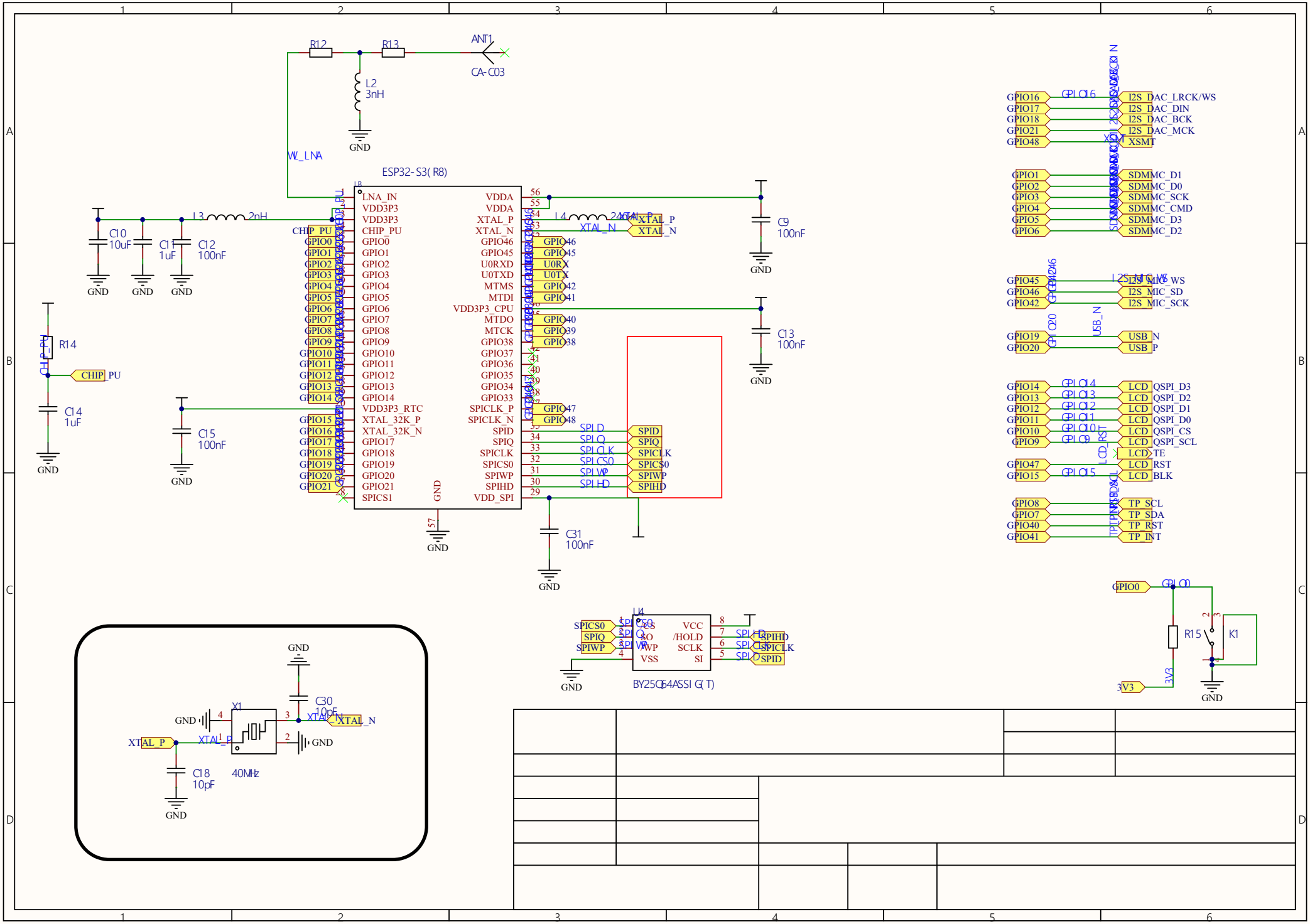
ESP32-S3(R8)
ANT1
CA-C03
R12
R13
L2
3nH
GND
W_LNA
L3
2nH
C10
10uF
C11
1uF
C12
100nF
L4
24nH
C9
100nF
C13
100nF
C31
100nF
R14
CHIP_PU
C14
1uF
C15
100nF
LNA_IN
VDD3P3
VDD3P3
CHIP_PU
GPIO0
GPIO1
GPIO2
GPIO3
GPIO4
GPIO5
GPIO6
GPIO7
GPIO8
GPIO9
GPIO10
GPIO11
GPIO12
GPIO13
GPIO14
VDD3P3_RTC
XTAL_32K_P
XTAL_32K_N
GPIO17
GPIO18
GPIO19
GPIO20
GPIO21
SPICS1
VDDA
VDDA
XTAL_P
XTAL_N
GPIO46
GPIO45
U0RXD
U0TXD
MTMS
MTDI
VDD3P3_CPU
MTDO
MTCK
GPIO38
GPIO37
GPIO36
GPIO35
GPIO34
GPIO33
SPICLK_P
SPICLK_N
SPID
SPIQ
SPICLK
SPICS0
SPIWP
SPIHD
VDD_SPI
U0RX
U0TX
GPIO42
GPIO41
GPIO40
GPIO39
GPIO47
GPIO48
SPID
SPIQ
SPICLK
SPICS0
SPIWP
SPIHD
GPIO16
GPIO17
GPIO18
GPIO21
GPIO48
I2S_DAC_LRCK/WS
I2S_DAC_DIN
I2S_DAC_BCK
I2S_DAC_MCK
XSMT
GPIO1
GPIO2
GPIO3
GPIO4
GPIO5
GPIO6
SDMMC_D1
SDMMC_D0
SDMMC_SCK
SDMMC_CMD
SDMMC_D3
SDMMC_D2
GPIO45
GPIO46
GPIO42
I2S_MIC_WS
I2S_MIC_SD
I2S_MIC_SCK
GPIO19
GPIO20
USB_N
USB_P
GPIO14
GPIO13
GPIO12
GPIO11
GPIO10
GPIO9
GPIO47
GPIO15
LCD_QSPI_D3
LCD_QSPI_D2
LCD_QSPI_D1
LCD_QSPI_D0
LCD_QSPI_CS
LCD_QSPI_SCL
LCD_TE
LCD_RST
LCD_BLK
GPIO8
GPIO7
GPIO40
GPIO41
TP_SCL
TP_SDA
TP_RST
TP_INT
GPIO0
R15
K1
3V3
U4
SPICS0
SPIQ
SPIWP
CS
SO
WP
VSS
VCC
/HOLD
SCLK
SI
SPIHD
SPICLK
SPID
BY25Q64ASSIG(T)
X1
C30
10pF
C18
10pF
40MHz
XTAL_P
XTAL_N