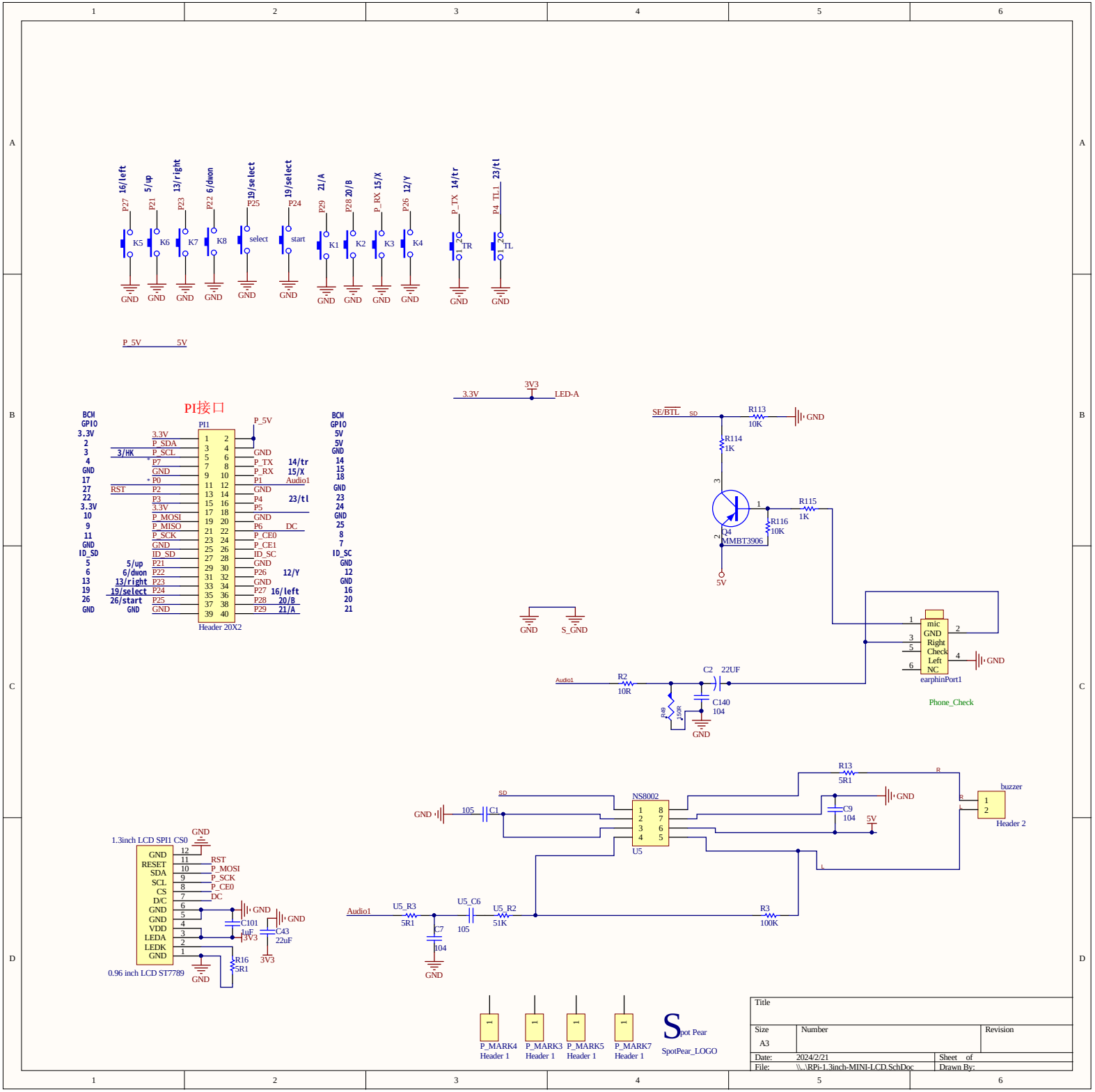

PI接口
PI1
Header 20X2
BCM GPIO 3.3V 2 3 4 GND 17 27 22 3.3V 10 9 11 GND ID_SD 5 6 13 19 26 GND
3.3V P_SDA P_SCL P7 GND P0 P2 P3 3.3V P_MOSI P_MISO P_SCK GND ID_SD P21 P22 P23 P24 P25 GND
3/HK
RST
5/up 6/dwon 13/right 19/select 26/start
P_5V
GND P_TX P_RX P1 GND P4 P5 GND P6 P_CE0 P_CE1 ID_SC GND P26 GND P27 P28 P29
14/tr 15/X Audio1 23/tl DC 12/Y 16/left 20/B 21/A
BCM GPIO 5V 5V GND 14 15 18 GND 23 24 GND 25 8 7 ID_SC GND 12 GND 16 20 21
P27 16/left
P21 5/up
P23 13/right
P22 6/dwon
P25 19/select
P24 19/select
P29 21/A
P28 20/B
P_RX 15/X
P26 12/Y
P_TX 14/tr
P4 TL1 23/tl
K5 K6 K7 K8 select start K1 K2 K3 K4 TR TL
GND
P_5V 5V
3.3V 3V3 LED-A
SE/BTL SD
R113 10K
R114 1K
R115 1K
R116 10K
Q4 MMBT3906
5V
S_GND
mic GND Right Check Left NC
earphinPort1
Phone_Check
Audio1
R2 10R
C2 22UF
C140 104
R49 150R
1.3inch LCD SPI1 CS0
GND RESET SDA SCL CS D/C GND GND VDD LEDA LEDK GND
RST P_MOSI P_SCK P_CE0 DC
C101 1uF
C43 22uF
3V3
R16 5R1
0.96 inch LCD ST7789
NS8002
U5
SD
105 C1
R13 5R1
C9 104
buzzer
Header 2
U5_R3 5R1
U5_C6 105
U5_R2 51K
C7 104
R3 100K
P_MARK4 Header 1
P_MARK3 Header 1
P_MARK5 Header 1
P_MARK7 Header 1
Spot Pear
SpotPear_LOGO
Title
Size A3
Number
Revision
Date: 2024/2/21
Sheet of
File: \\..\RPi-1.3inch-MINI-LCD.SchDoc
Drawn By: